SYSTEM & COMPONENTS ARE COVERED BY DESIGN REGISTRATION & PATENT APPLICATIONS.

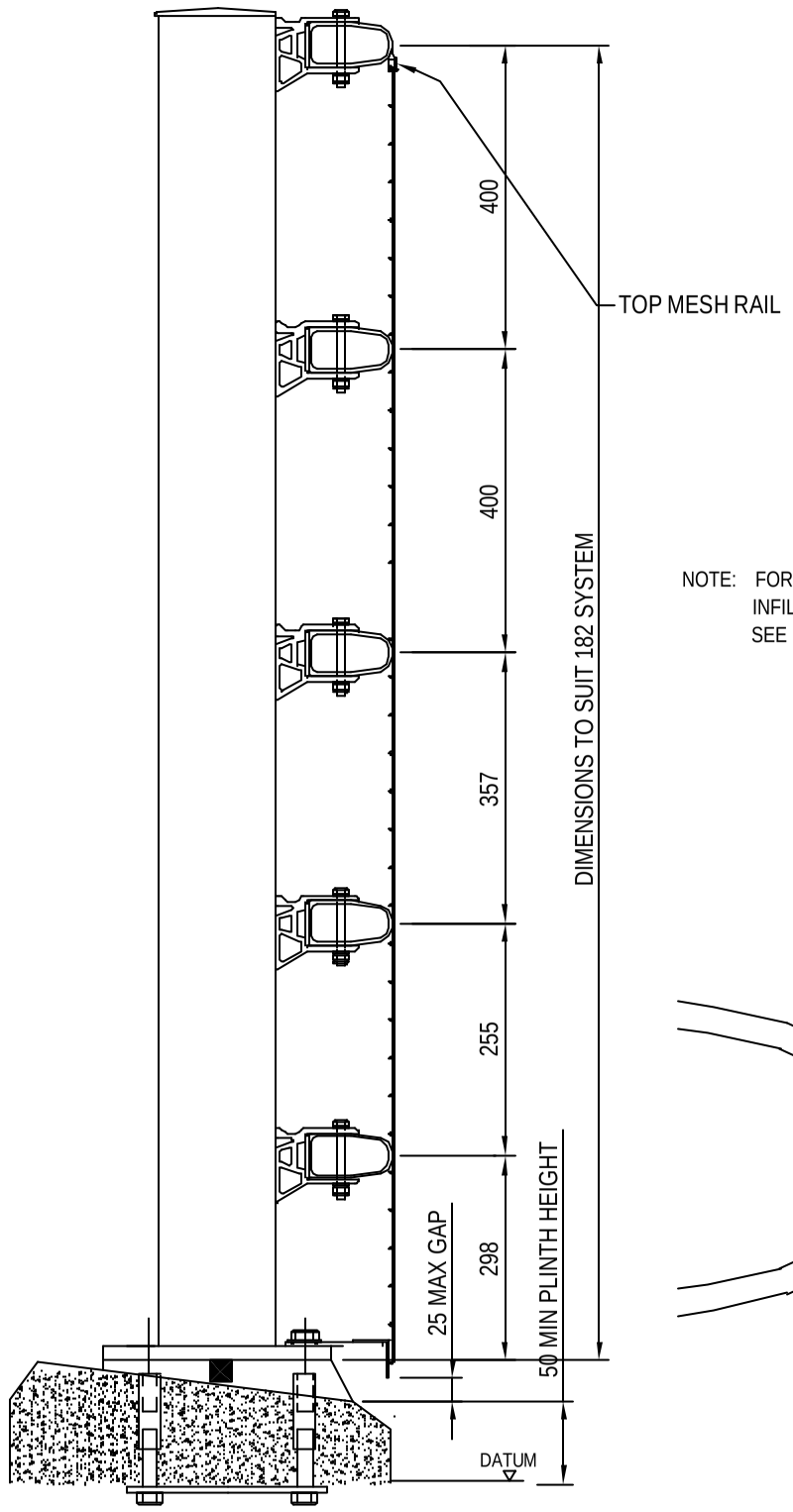

TYPICAL ELEVATION ON POST

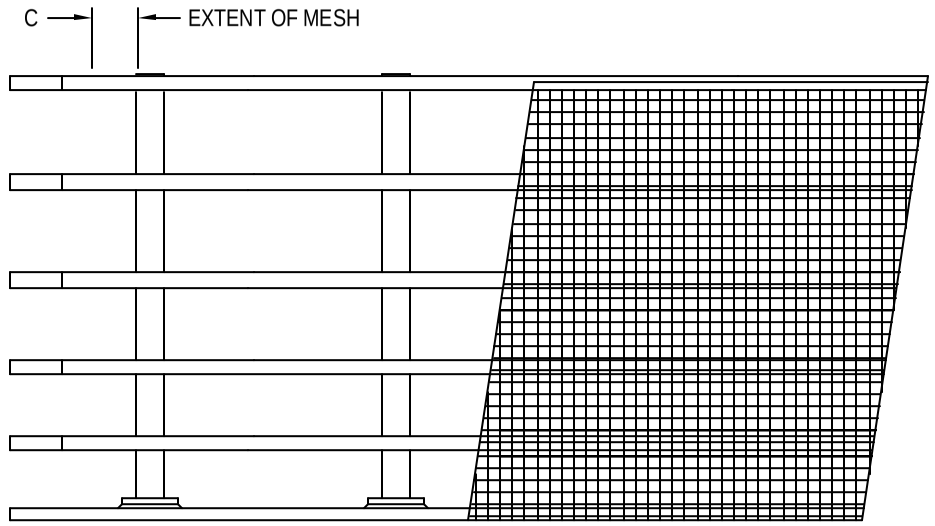

TYPICAL FRONT ELEVATION ON TRAFFIC FACE

NOTE: FOR TYPICAL MESH INFILL FIXING DETAILS SEE DRG. BPL/100/8.

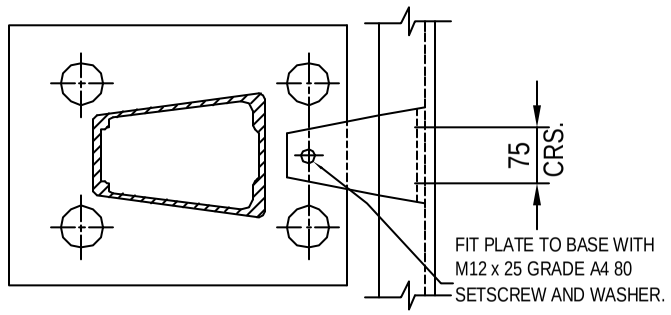

SECTION 'A-A' - BOLTS AND WASHERS OMITTED FOR CLARITY

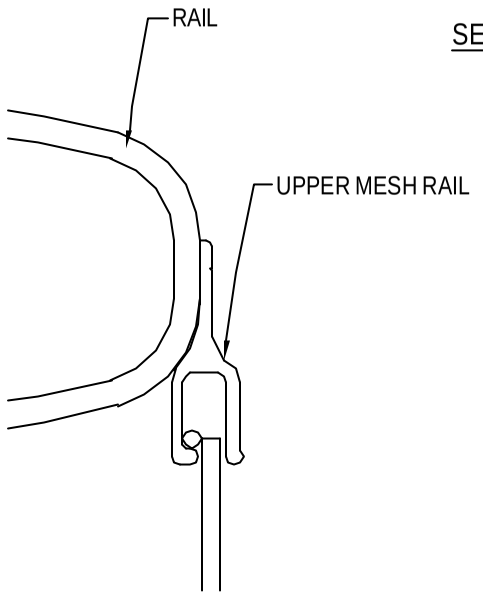

ENLARGED DETAIL OF UPPER MESH ATTACHMENT

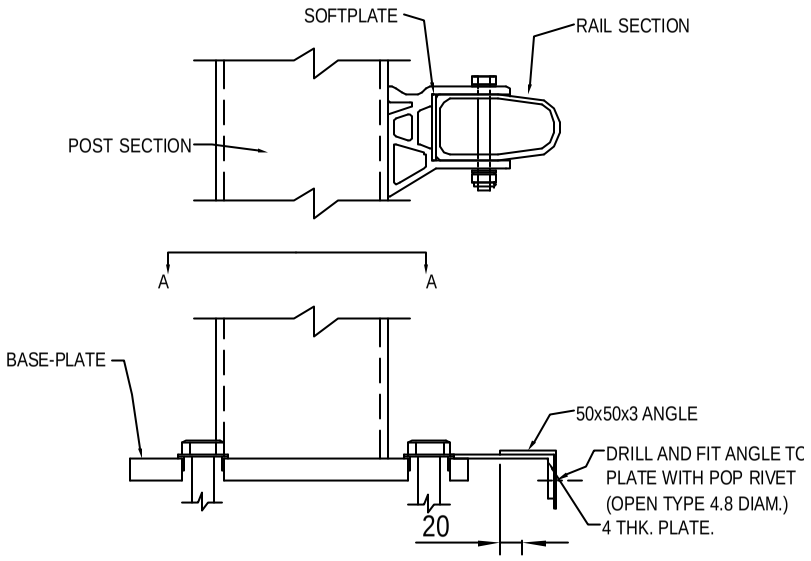

SECTION 'C-C'

copyright note:
this drawing is the property of bridge parapets ltd. the contents of this drawing may not be copied or reproduced without written permission from bridge parapets ltd.

NOTES

1) FOR DRAWING LIST SEE DRG. BPL/100/100.
2) FOR MATERIAL SPECIFICATION SEE DRG. BPL/100/100.
3) FOR FULL DETAILS OF PARAPETS SEE GENERAL ARRANGEMENT DRAWINGS.
4) MESH PANELS ARE TO BE MILD STEEL AND BE HOT DIP GALVANISED. ANY OTHER SURFACE FINISH TO BE DETERMINED BY THE CONTRACT.
5) POP RIVETS TO BE ALUMINIUM 4.8 DIAM OPEN TYPE TUCKER TAP D x REQUIRED LENGTH, OR SIMILAR APPROVED.
6) FOR LOWER MESH RAIL JOINT DETAILS SEE DRG. BPL/100/14.

REV.	DATE	AMENDMENT
C	05/12/02	MINOR CORRECTIONS AND CLARIFICATIONS
B	09/05/02	WELDING AMENDED, RAIL AND SPACER SECTION ALTERED.
A	27/06/01	ISSUED FOR COMMENT

BRIDGE PARAPETS LTD

DRAWN	CHECKED
CM	DM
DATE	SCALE
28/06/01	VARIES

TITLE

MESH INFILL DETAILS:
L/1.80/M AND N/1.80/M

DRAWING NUMBER

BPL/100/12