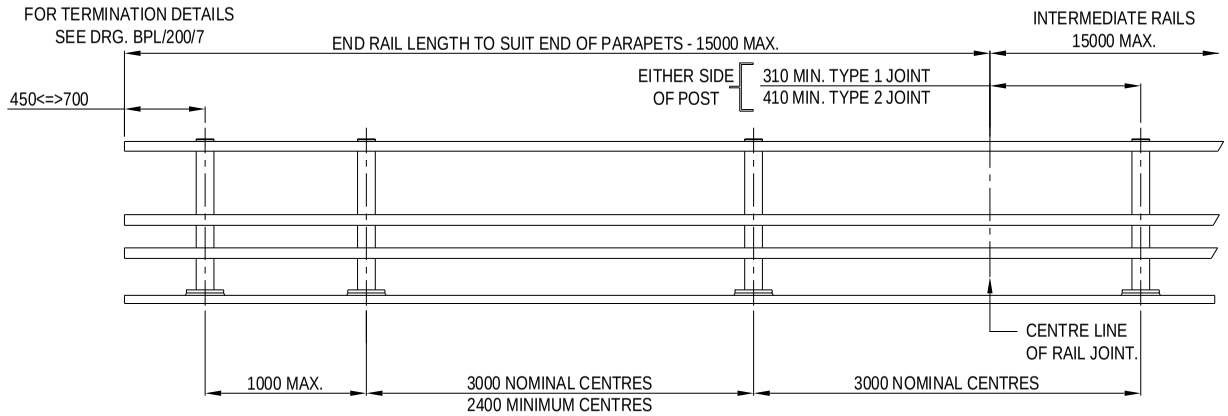

TYPICAL ELEVATION ON FACE OF PARAPET

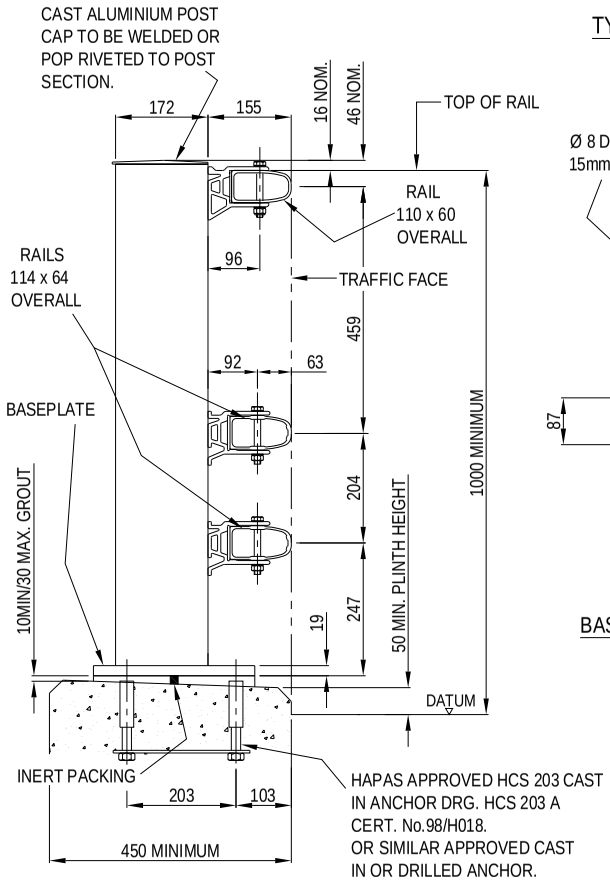

PARAPET SECTION - SCALE 1 : 10

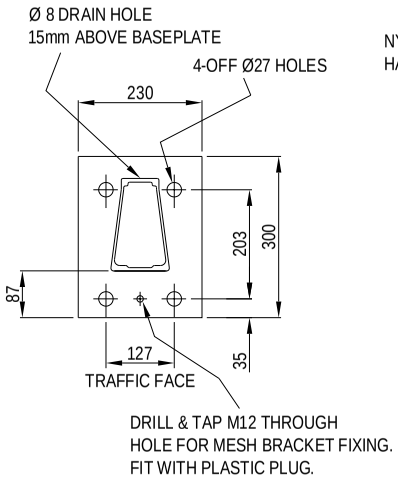

BASEPLATE DETAIL - SCALE 1:10

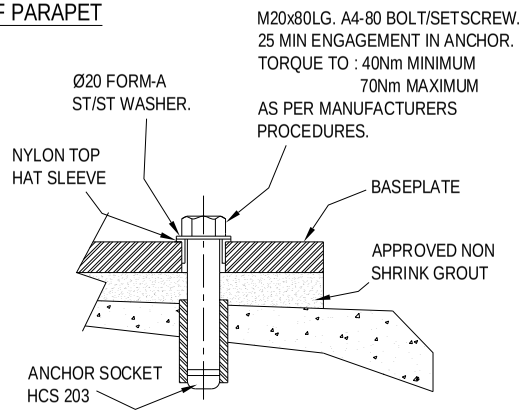

HOLDING DOWN BOLT INFORMATION- SCALE 1:4

POST INFORMATION		
ULTIMATE UNFACTORED DESIGN MOMENT OF RESISTANCE OF POST AT UNDERSIDE OF BASE (kNm)	=	33.1
CO-EXISTENT SHEAR (kN)	=	58.07
ULTIMATE SHEAR FORCE RESISTANCE OF POST (kN)	=	148
BS EN 1317 PARTS 1 & 2		
TEST DESIGNATION	=	TB32 + TB11
CONTAINMENT LEVEL	=	N2
WORKING WIDTH RANKING	=	W3
IMPACT SEVERITY LEVEL	=	C

DESIGNED AND TESTED TO MEET THE
REQUIREMENTS OF EN1317 PARTS 1 & 2

copyright note:
this drawing is the property of bridge parapets ltd. the contents of this drawing may not be copied or reproduced without written permission from bridge parapets ltd.

NOTES

1) ALL MATERIALS AND WELDING SHALL COMPLY WITH THE RELEVANT STANDARDS.
2) UNDERSIDE OF BASEPLATE TO BE GIVEN 2 COATS OF FACTORY APPLIED BITUMASTIC PAINT TO BS 3416.
3) IDENTIFICATION PLATES TO BE ATTACHED TO MANUFACTURERS SPECIFICATION.
4) ALL BOLTS AND NUTS TO A4 CLASS 80 STAINLESS STEEL TO CURRENT BS/EN STANDARDS.
5) FOR DRG.S LIST SEE DRG. BPL/200/200.
6) FOR INFILL DETAILS SEE DRG. BPL/200/8.
7) ALL ALUMINIUM EXTRUSIONS TO BE 6082-T6.
8) RAILS CAN BE SITE/SHOP CURVED TO SUIT SPECIFIC APPLICATIONS.

REV.	DATE	AMENDMENT
A	19/01/07	ISSUED FOR COMMENT

BRIDGE PARAPETS LTD
TOMICH INDUSTRIAL ESTATE, MUIR OF ORD, ROSS-SHIRE, SCOTLAND IV6 7UA
TEL: +44 (0) 1463 870194 FAX: +44 (0) 1463 870667
E-MAIL: SALES@BRIDGE-PARAPETS.COM WEB: WWW.BRIDGE-PARAPETS.COM

DRAWN	CHECKED
PA	DM
DATE	**SCALE**
18/01/07	AS NOTED FOR A3

TITLE

GENERAL ARRANGEMENT OF
BPL SERIES 200 ALUMINIUM PARAPET
201(L/1.00/0) 202(L/1.00/M)
203(N/1.00/0) 204(N/1.00/M)

DRAWING NUMBER

BPL/200/1

SYSTEM & COMPONENTS ARE COVERED BY DESIGN REGISTRATION & PATENT APPLICATIONS.